UTAH GEOLOGICAL SURVEY
UTAH DEPARTMENT OF NATURAL RESOURCES
in cooperation with
THE UNITED STATES GEOLOGICAL SURVEY

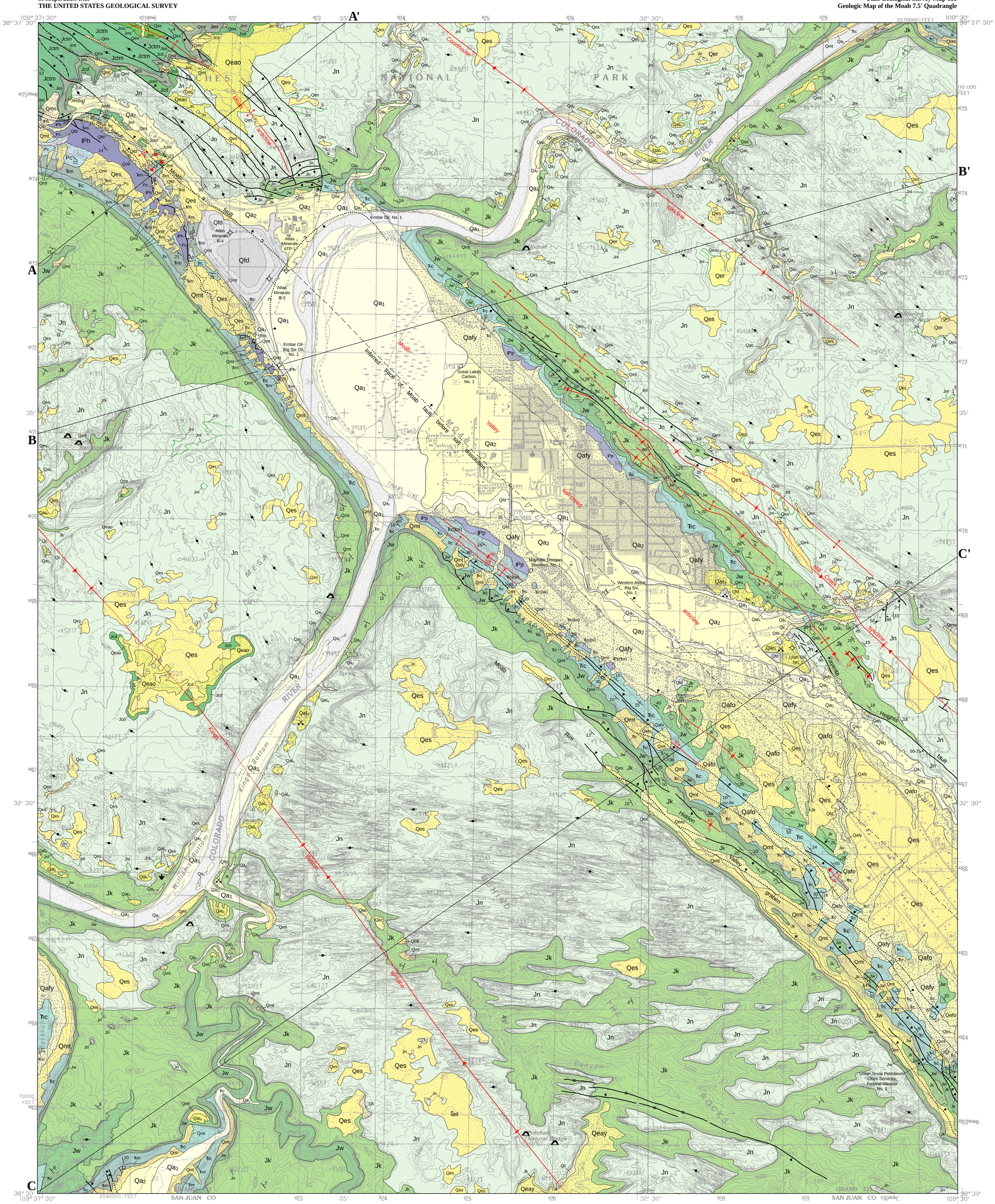

Base from U.S. Geological Survey,
Moab 7.5' provisional quadrangle, 1985

SCALE 1:24,000

1 0.5 0 1 MILE

1000 0 1000 2000 3000 4000 5000 6000 7000 FEET

1 0.5 0 1 KILOMETER

CONTOUR INTERVAL 40 FEET
DATUM IS MEAN SEA LEVEL

Field work by Doelling north of Mill Creek and Colorado River, 1982, 1994 and 1995;
by Ross south of Mill Creek and Colorado River, 1993-1995;
and by Mulvey in Moab-Spanish Valley, 1993
Project Manager: Grant Willis

12°6'
215 mil

2002 MAGNETIC DECLINATION
AT CENTER OF SHEET

GEOLOGIC MAP OF THE MOAB 7.5' QUADRANGLE
GRAND COUNTY, UTAH

by

Hellmut H. Doelling, Michael L. Ross, and William E. Mulvey

2002

UTAH

DESCRIPTION OF GEOLOGIC UNITS

Quaternary Deposits

Qa1 Modern alluvium (Holocene) - Poorly to well-sorted sand, silt, clay, and lenses of gravel in active channels and modern floodplains; as much as 20 feet (6 m) thick.

Qa2 Older alluvium (Holocene to upper Pleistocene) - Sand, silt, minor amounts of clay, and local gravel; contains a variety of locally derived and exotic clasts; forms first surface 10 to 50 feet (3-15 m) above modern floodplains and channels; some deposit surfaces are characterized by weak soil development; as much as 30 feet (9 m) thick.

Qat3, Qat4, Qat5, Qat6 Alluvial-terrace deposits (Pleistocene) - Moderately sorted, poorly stratified gravel in a calcareous sandy matrix; contain a variety of locally derived and exotic clasts similar to Qa2; preserved as isolated remnants along major drainages; Qat3 gravels are found between 50 and 100 feet (15-30 m) above the present stream channels, some are capped by an eroded Stage II-III pedogenic carbonate soil; Qat4 gravels are between 100 and 150 feet (30-45 m) above the present stream channels; Qat5 gravels are between 200 to 240 feet (61-73 m) above the present stream channels; and Qat6 gravels are between 260 to 280 feet (79-85 m) above the present stream channels; Qat5 and Qat6 clasts are distinguishable from those of lower terraces by a well-developed rind of desert varnish; Pleistocene; as much as 60 feet (18 m) thick.

Qabf Basin-fill deposits (mostly Pleistocene) (cross section B-B' only) - Mostly alluvial deposits that fill Moab Valley; gravel, sand, silt, and minor amounts of clay encountered in drill holes; may exceed 450 feet (137 m) in thickness.

Qafy Younger alluvial-fan deposits (Holocene to upper Pleistocene) - Poorly sorted, poorly stratified, muddy to sandy cobble gravel; most clasts are locally derived and range from angular to subrounded; in distal parts locally derived subangular clasts are mixed with rounded igneous porphyry clasts; present along northeast and southwest sides of Moab and Spanish Valleys; fans have dendritic drainage patterns; located at the base of cliffs or in gullies incised in older fan deposits (Qafo); as much as 20 feet (6 m) thick.

Qafo Older alluvial-fan deposits (upper to middle Pleistocene) - Poorly sorted, poorly stratified, muddy to sandy cobble gravel; boulders present near cliffs; clasts are both locally derived and from the La Sal Mountains, and therefore range from angular to rounded; commonly covered by a mantle or veneer of sand (Qes or Qes/Qafo, respectively); fans are dissected and have limited fan morphology; present on divide between Moab and Spanish Valleys; as much as 40 feet (12 m) thick.

Qmt Talus (Holocene to upper Pleistocene) - Angular boulders, cobbles, and smaller rock fragments commonly in a finer grained matrix; derived from rock falls and forms veneers to mantles on slopes below cliffs; commonly grades downslope into alluvial-fan deposits; as much as 20 feet (6 m) thick.

Qms Landslide deposits (probably upper or uppermost middle Pleistocene) - Large mass of the Moab Member of the Curtis Formation that slid along a bedding-plane parting at its contact with the underlying Slick Rock Member; located in Moab Canyon north of U.S. Highway 191 near northwest corner of quadrangle; about 60 feet (20 m) thick.

Qc Colluvium (Holocene) - Poorly sorted gravel, sand, and silt forming thin mantles on slopes; less than 6 feet (2 m) thick.

Qes Eolian-sand deposits (Holocene) - Well-sorted, fine- to medium-grained, quartzose sand with silt; typically form thin, discontinuous sheets and small dunes, and locally fill hollows; locally as much as 30 feet (9 m) thick.

Qeay Younger eolian and alluvial deposits (Holocene) - Mainly fine- to medium-grained sand mixed with silt and sparse lenses of granules and pebbles; accumulated and reworked by eolian and alluvial processes; generally thin and restricted to ephemeral washes and hollows on benches capped by Glen Canyon Group sandstone; larger deposits floor small valleys and narrow canyons; as much as 10 feet (3 m) thick.

Qeao Older eolian and alluvial deposits (middle to lower Pleistocene) - Mainly sand and silt, but contain sparse lenses of rounded granules and pebbles and pedogenic carbonate rubble; sheet-like and locally preserved on mesas and benches; deposit on Poison Spider Mesa is capped by an eroded Stage V pedogenic carbonate; as much as 15 feet (5 m) thick.

Qer Eolian and residual deposits (Holocene to upper Pleistocene) - Mostly a mix of yellow, tan, and reddish-orange, fine-grained sand and angular limestone rubble derived from carbonate units in the Navajo Sandstone (Jnl) on which they rest; mostly less than 3 feet (1 m) thick.

Qac Alluvial and colluvial deposits (Holocene to upper Pleistocene) - Mainly sand, but commonly contain a poorly sorted mixture of pebbles, sand, silt, and clay; clasts are subrounded to angular; in ephemeral washes and on adjacent hillslopes where colluvium is reworked and transported by alluvial processes in active channels; as much as 10 feet (3 m) thick.

Qfd Fill and disturbed deposits (historical) - Clay- to boulder-size material used as railroad and road fill; mostly sand-size mill tailings and fill at the Atlas Minerals mill site; gravel pits, and larger areas disturbed by development; variable thicknesses as much as 70 feet (21 m).

Jurassic Rocks

Jms Salt Wash Member of Morrison Formation (Upper Jurassic) - Typically blocky ledges of pale-yellow-gray, cross-bedded sandstone interbedded with slope-forming, red and green mudstone and siltstone; only a small remnant is present in the northwest corner of the quadrangle; preserved thickness 30 feet (9 m).

Jmt Tidwell Member of Morrison Formation and Summerville Formation(?) (Upper and Middle Jurassic) - Red to brown, thin-bedded, silty sandstone, muddy sandstone, siltstone, and shale containing thin to nodular beds of gray limestone; large white siliceous (chert) concretions are associated with the limestone; forms gentle slope littered with limestone and chert fragments; basal 6 to 12 feet (2-4 m) is brown to red, thin-bedded, fine-grained sandstone and siltstone that forms a steep slope that correlates with the Summerville Formation; contact between this steep slope and remainder of unit (Tidwell Member) may be the J-5 unconformity; total thickness about 40 to 50 feet (12-15 m).

Jctm Curtis Formation, Moab Member (Middle Jurassic) (informal designation - see text) - Pale-gray-orange, pale yellow-brown, and light-gray, fine- to medium-grained, quartzose eolian sandstone; calcareous; forms massive cliff commonly with conspicuous joints; 60 to 100 feet (18-30 m) thick.

Jes Entrada Sandstone, Slick Rock Member (Middle Jurassic) - Red-orange to brown, thick-bedded, cross-bedded, quartzose eolian sandstone; very fine to fine grained with medium to coarse grains along cross-bed laminae; iron-oxide or calcium-carbonate cemented; forms smooth cliffs and bare rock slopes; estimated thickness 250 feet (76 m).

Jcd Carmel Formation, Dewey Bridge Member (Middle Jurassic) (formerly member of Entrada Sandstone - see text) - Red-brown, muddy to silty, fine- to medium-grained sandstone; iron-oxide or calcium-carbonate cemented; medium to thick bedded; weathers to distinct irregular and contorted rounded ledges; basal contact is the J-2 unconformity; 90 to 110 feet (27-34 m) thick.

Glen Canyon Group (Jn, Jk, Jw)

Jn, Jnl Navajo Sandstone (Lower Jurassic) - Pale-orange to light-gray to red-orange, fine-grained, quartzose eolian sandstone; calcareous and silica cemented; medium to massively bedded, commonly with large-scale sweeping cross-beds; locally contains thin, gray, cherty, sandy carbonate beds (Jnl); forms smooth vertical cliffs and rounded knolls; 300 to 700 feet (91-213 m) thick.

Jk Kayenta Formation (Lower Jurassic) - Moderate-orange-pink and red-purple sandstone, interbedded with dark-red-brown to gray-red siltstone and lesser red intraformational conglomerate and mudstone; sandstones mainly lithic arkose to feldspathic litharenite; mainly of fluvial origin; calcareous cement; pink-orange eolian sandstone beds are conspicuous in upper part; forms thick-bedded, step-like, resistant ledges and steep slopes; 250 to 400 feet (76-122 m) thick.

Jw Wingate Sandstone (Lower Jurassic) - Gray-orange-pink, gray-orange, and moderate-orange-pink to pale-red-brown, very fine- to fine-grained, quartzose to subarkosic, eolian sandstone; calcareous and siliceous; commonly forms massive cliffs along canyon walls or blocky cliffs where fractured; cliff surfaces commonly streaked with dark-brown desert varnish; 250 to 400 feet (76-122 m) thick.

Triassic Rocks

TRc Chinle Formation (Upper Triassic) - Red-brown to gray-red, interbedded sandstone, conglomeratic sandstone, siltstone, and mudstone; lenticular and planar sandstone and conglomeratic sandstone are calcareous to quartzose and fine to coarse grained; indistinctly bedded bentonitic and calcareous mudstones form steep slopes separated by ledges and cliffs of sandstone and conglomeratic sandstone; two informal, unmapped members -- a discontinuous lower member of quartzose sandstone and mottled siltstone and mudstone, and an upper member that consists of a lower slope former, middle ledge former, upper slope former, and upper ledge former made up of planar flat beds of possible eolian origin; 100 to 700 feet (30-213 m) thick.

TRm Moenkopi Formation (Lower Triassic) - Light- to dark-brown ("chocolate"brown), interbedded, largely fine-grained, micaceous sandstone, siltstone, mudstone, and shale; sandstone is commonly ripple marked; forms slopes separated by medium to thin continuous ledges; locally contains distinct pebble conglomerate near base; 0 to 750 feet (0-229 m) thick.

Permian Rocks

Pc Cutler Formation (Lower Permian) - Red-purple, arkosic fluvial sandstone and conglomeratic sandstone interbedded with red to red-orange, eolian sandstone; medium to thick bedded; thin beds of red-purple siltstone and light-gray, fossiliferous limestone in lower part; forms steep slopes, ledges, and cliffs; 0 to 600 feet (0-183 m) thick at the surface; may be as thick as 5,000 feet (1,524 m) in subsurface due to salt movement.

Pennsylvanian Rocks

IPh Honaker Trail Formation (Upper Pennsylvanian - Missourian-Virgilian) - Light-gray, gray-pink, gray-purple, and gray-brown interbedded sandstone, limestone, and siltstone; sandstone is fine grained and quartzose, limestone is argillaceous and fossiliferous, siltstone is commonly micaceous; thin to thick bedded; forms ledges; exposed thickness may be as much as 700 feet (213 m); subsurface thickness variable due to salt movement, but may be as much as 2,700 feet (823 m) thick.

IPp Paradox Formation (Middle Pennsylvanian - Desmoinesian) - Gray, sucrosic gypsum, gypsiferous claystone, gray to black shale, with subordinate fragments of gray, silty sandstone and carbonates as cap rock; contains cyclically bedded evaporite, dolomite, shale, and clastic beds in the subsurface; thickness highly variable due to salt movement, estimated cap rock thickness as much as 700 feet (213 m), estimated height of Moab salt diapir at least 9,000 feet (2,743 m) reaching a maximum width of 2 miles (3.2 km).

Subsurface Rocks

IPpt Pinkerton Trail Formation (Middle Pennsylvanian) - (shown on cross sections)

IPm Molas Formation (Middle Pennsylvanian) - (shown on cross sections)

M Mississippian rocks (shown on cross sections)

CORRELATION OF GEOLOGIC UNITS

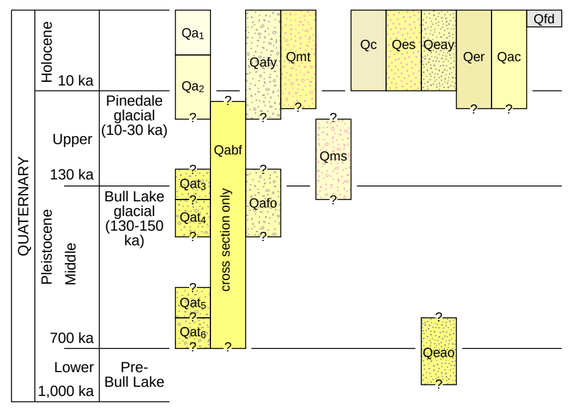

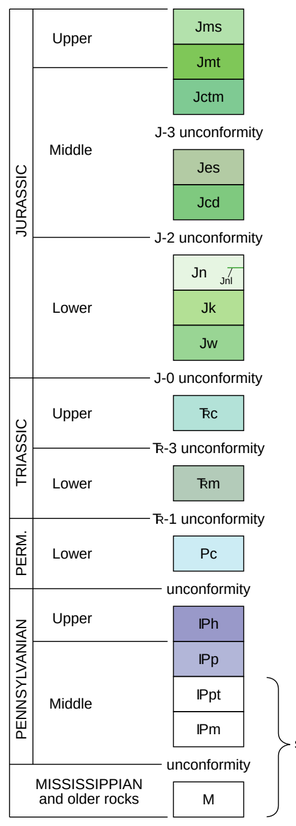

LITHOLOGIC COLUMN

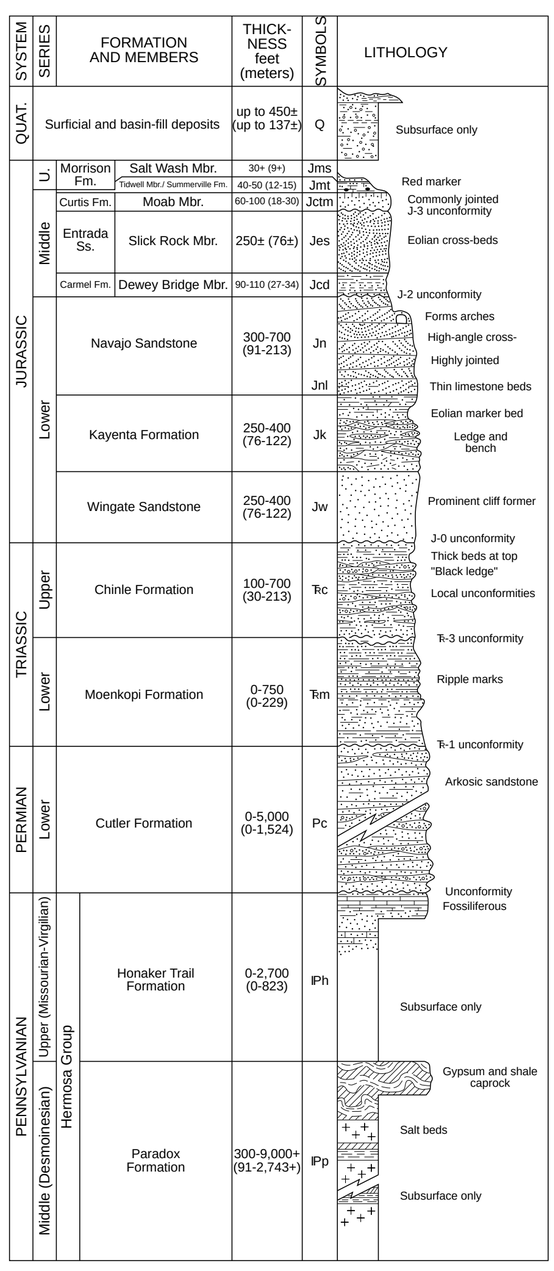

SYMBOLS
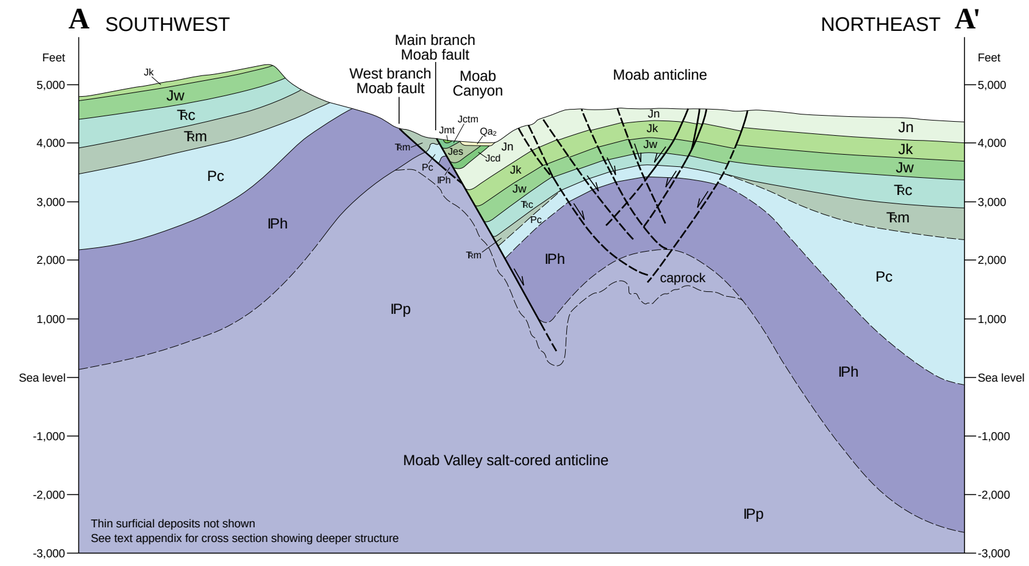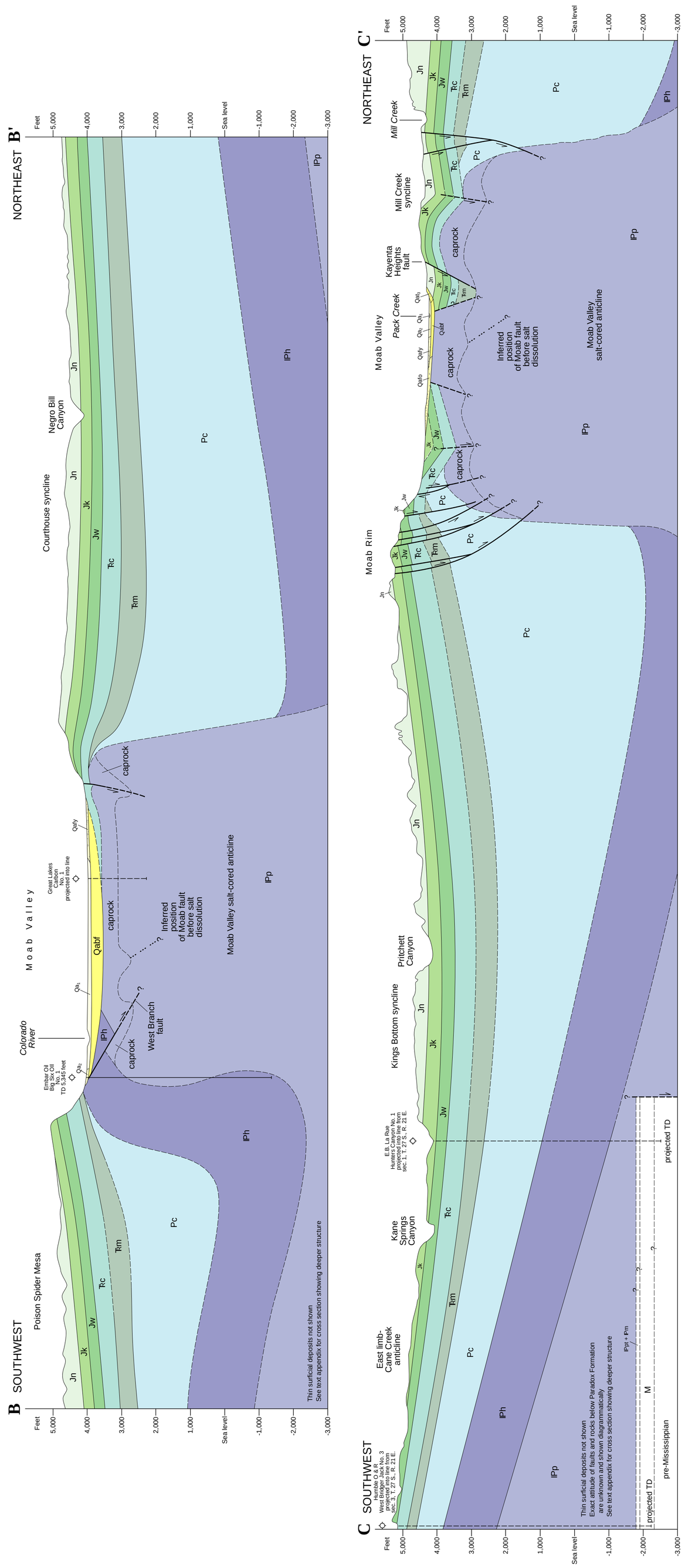
- Contact - Dashed where inferred
- Fault - Dashed where inferred, dotted where covered, bar and ball on downthrown block where known, arrow and number indicate dip and dip direction of fault, arrows on cross section show offset, queried where existence uncertain
- Inferred trace of Moab fault prior to salt dissolution
- Axial trace of anticline - Dotted where covered, large arrow shows plunge and numbers are dips of bedding on limbs
- Axial trace of syncline - Dashed where inferred, dotted where covered, large arrow shows plunge and numbers are dips of bedding on limbs
- Axial trace of monocline - Dotted where covered, small arrows show dip of beds
- Near-vertical fracture with minor brecciation
- Strike and dip of beds, inclined
- Strike of near-vertical joints
- Adit
- Dry hole, abandoned (see table 2)
- Gas injection, disposal, or brine well (see table 2)
- Shallow borehole (only holes referred to in text figure 7 shown)
- Gravel pit
- Natural stone arch or bridge
- Dinosaur trackway
- TRc(bx) Brecciated rock (bx) - Pattern over affected unit added to map unit label